SMART-Sensor EPD

Programmable Sensor

Monitor your space

A complement to any room, the Reliable Controls SMART-Sensor™ Electronic Paper Display (EPD) delivers a modern networked-sensor solution that allows you to connect with up to 10 configurable parameters related to your space.

Better by design

RELIABLECONTROLS.COM/SS3-E

Product features

Aesthetic Design
- Slim profile with standard SS3 Thin Backplate.
- Installs into standard electrical box.

Easy Programming
- 10 programmable objects, such as inputs, outputs, and values.
- Program object values for user adjustment or as display only.
- Configure objects to display on the home screen.
- Icons for display: On, off, auto, manual, cool, heat, occupancy, fan, and fan speed.
- Configure up to seven objects to display simultaneously.

Onboard Temperature Sensor
- Dedicated 10 kΩ thermistor.

Language Library
- The SMART-Sensor EPD hosts an onboard language library that contains over 90 common industry words and phrases in seven languages. Users can select from the following:
  - English.
  - French.
  - Spanish.
  - Portuguese.
  - German.
  - Italian.
  - Simplified Chinese.

Warranty
- 5 years.

Multiple Screen Styles
- Home screen displays default space conditions.
- List screen displays all programmed objects.
- Accessibility screen displays all values and icons in large format.

Connection and Addressing
- Use buttons to enter a unique address on the SMART-Net network.
- Valid addresses are 1–16.
- Accepts wires 14–26 AWG.
- Four-wire connection.

Built-In Configuration Tools
- Use the SMART-Sensor EPD as an MSet Tool, Flow Tool, or Diagnostics Tool.

Optional Front Light
- EPD screen glows faintly in low light or night conditions while in use, then turns off after 10 seconds of inactivity.

Order Options
- CO_2 sensor.
- Humidity sensor.
- Two inputs and two outputs.
- Occupancy sensor.
- VOC sensor. Must be ordered with humidity sensor option.
- Jack option. Adds micro-USB connector and required network terminations to allow local access to the host controller using an X-Port-2 Converter with additional custom cables. Cannot be ordered on devices with both an occupancy sensor and a setpoint slider.

Technical specifications

Supply Voltages from Controller
- Base model consumes 15 mA at 5 VDC.
- -CO2 option adds 10 mA.
- -FL option adds 4 mA.
- -IO option adds 10 mA.
- -OC option adds 0.2 mA.
- -V option adds 20 mA.

Temperature Specifications
- 12-bit A/D converter.
- User calibrated to ±0.1°C (0.18°F) accuracy.
- Onboard thermistor: 0°C to 50°C (32°F to 122°F).
- Thermistor input: –40°C to 120°C (–40°F to 250°F).

Language Support
- Supports seven languages.

© 2022 Reliable Controls® Corporation

Technical Specifications

Display
- 200 x 200 pixels.
- 23 x 23 mm (15/16" x 15/16").
- Black and white.

Front Light (-FL Option)
- White LED front light.

Humidity Sensor (-H Option)
- 0.1% display resolution.
- 0%–100% range.
- Accuracy ±2.4% maximum from 0%–90%.

VOC Sensor (-V Option)
- Automatic background calibration.
- Heated metal oxide sensor.
- 0-32,767 ppb range.
- Indoor air quality applications.
- Accuracy:
  - Typically 25% of measured value.
  - Maximum 50% of measured value.
- Resolution:
  - 1 ppb (0 to 2,008 ppb).
  - 6 ppb (2,008–11,110 ppb).
  - 32 ppb (11,111–32,767 ppb).

Wiring Terminals
- 14–26 AWG (2.08–0.13 mm^2).
- Stranded or solid core.
- Copper conductors only.
- Low capacitance <82 pF/m (25 pF/f).

Weight
- 0.086 kg (0.19 lb).

Certifications
- CE.
- FCC CFR 47 Part 15 Class B.
- ICES-3 (B).
- UL 916 Listed.
- WEEE.

Inputs and Outputs (-IO Option)
- Two thermistor or dry-contact inputs on devices with the -IO option. Only one input is available on models with the -V option.
- Supports 10K type III thermistor only (0°C/32°F=29.49 kΩ).
- Two solid-state relay outputs that switch 24 VAC/VDC at 500 mA maximum.

CO_2 Sensor (-CO2 Option)
- Automatic background calibration period of 8 days.
- Single-beam nondispersive infrared sensor.
- 0–3,276 ppm range.
- Accuracy ±40 ppm.
- Nonlinearity <1% of full scale.

Occupancy Sensor (-OC Option)
- Passive infrared radiation sensor.
- 64 detection zones.
- 94° horizontal range/82° vertical range.
- 5 m (16.4 ft) maximum detection distance.

Micro-USB Connector (-J Option)
- Micro-USB connector and required network terminations to allow local access to the host controller using an X-Port-2 Converter with additional custom cables. Provides two-pin connections to the host controller's MS/TP network.
- Cannot be ordered with devices that combine the -OC and -S options.

Ambient Limits
- Operating: 0°C to 50°C (32°F to 122°F).
- Shipping: –25°C to 60°C (–13°F to 140°F).
- Humidity: 10%–90% RH noncondensing.

Dimensions
- Base model: 7 cm W x 12 cm H x 1.9 cm D (2 3/4" W x 4 3/4" H x 3/4" D).
- Base model with CO_2 sensor: 7 cm W x 12 cm H x 2.5 cm D (2 3/4" W x 4 3/4" H x 1" D).

© 2022 Reliable Controls® Corporation

Ordering

Models

SS3-E

- SMART-Sensor EPD, warm gray.

Options

- -CO2 adds CO_2 sensor.
- -FL adds front light.
- -H adds humidity sensor.
- -IO adds two dry contact/thermistor inputs and two solid-state relay outputs.
- -J adds micro-USB connector and required network terminations.
- -OC adds occupancy sensor.
- -V adds VOC sensor.
- /W for white enclosure.

Build Your Order

To create the order number, add your options to the base model. For example, SS3-E-CO2-H-J/W is the order number for a SMART-Sensor EPD with CO_2 and humidity sensors and a micro-USB connector with network terminations in a white enclosure. Order limitations are as follows:

- -J option requires a CC-SS3-XP2 accessory.
- -V option must be ordered with the -H option.

Accessories

SNX

- SMART-Net Expansion Board.

ENC-SS3-DPB

- SS3 Deep Backplate, warm gray.

ENC-SS3-DPB/W

- SS3 Deep Backplate, white.

EC-SS3-CC

- Conduit coupler, warm gray.

EC-SS3-CC/W

- Conduit coupler, white.

CC-SS3-XP2

- Cable that connects an X-Port-2 to a SMART-Sensor EPD with the -J option.

© 2022 Reliable Controls® Corporation

Product images

SMART-Sensor EPD

SMART-Sensor EPD Side Profile

SMART-Sensor EPD with micro-USB connector wiring

SS3 Deep Backplate with conduit coupler

© 2022 Reliable Controls® Corporation

Screens

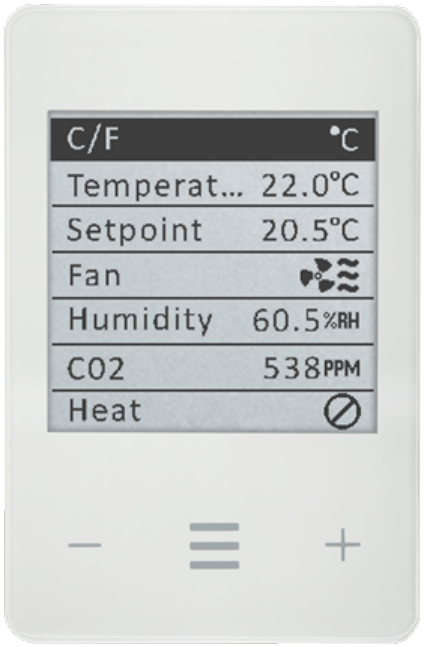

List screen

Home screen

Accessibility screens

© 2022 Reliable Controls® Corporation

Screens

Accessibility screens

Relative humidity sensor accuracy

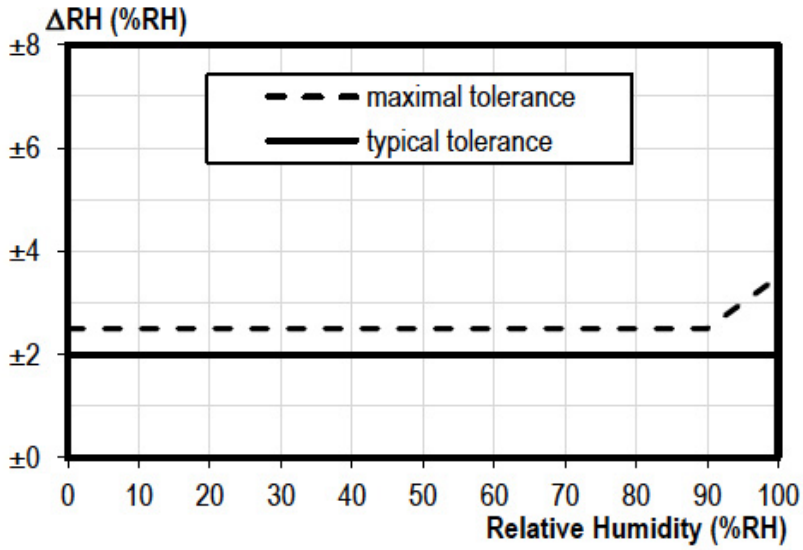

© 2022 Reliable Controls® Corporation

Diagrams

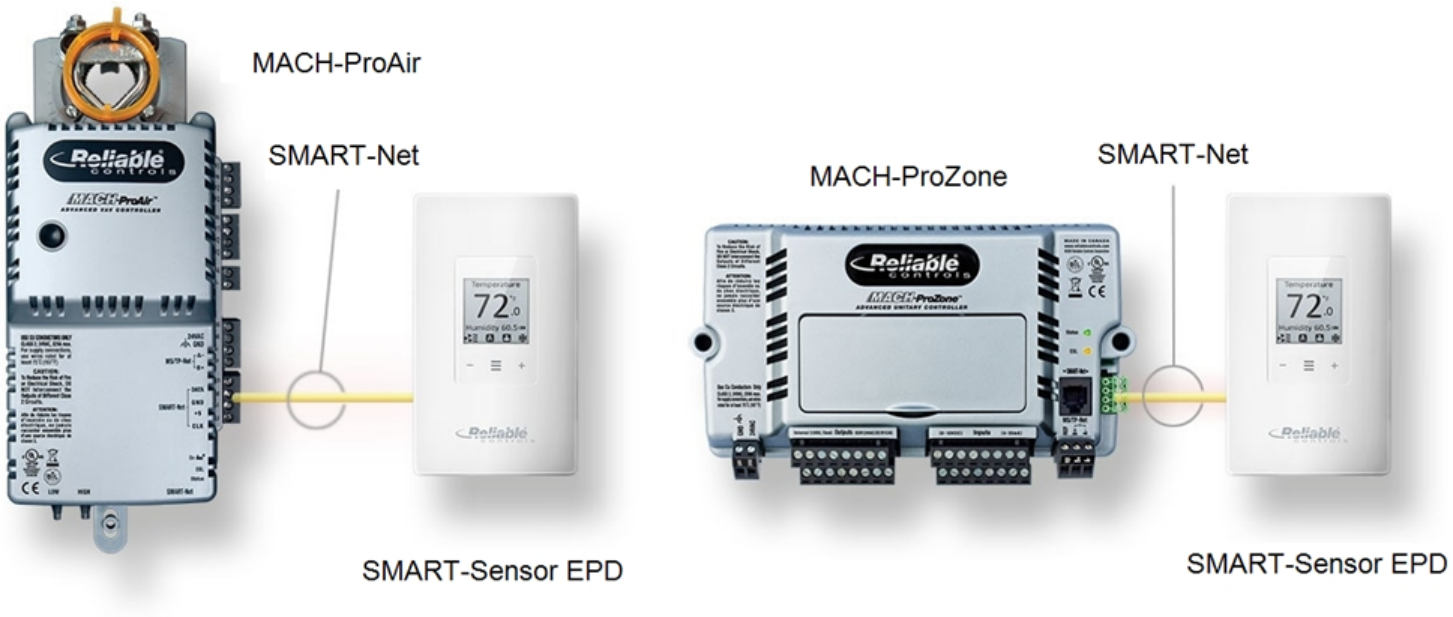

SMART-Net network wiring

© 2022 Reliable Controls® Corporation

Diagrams

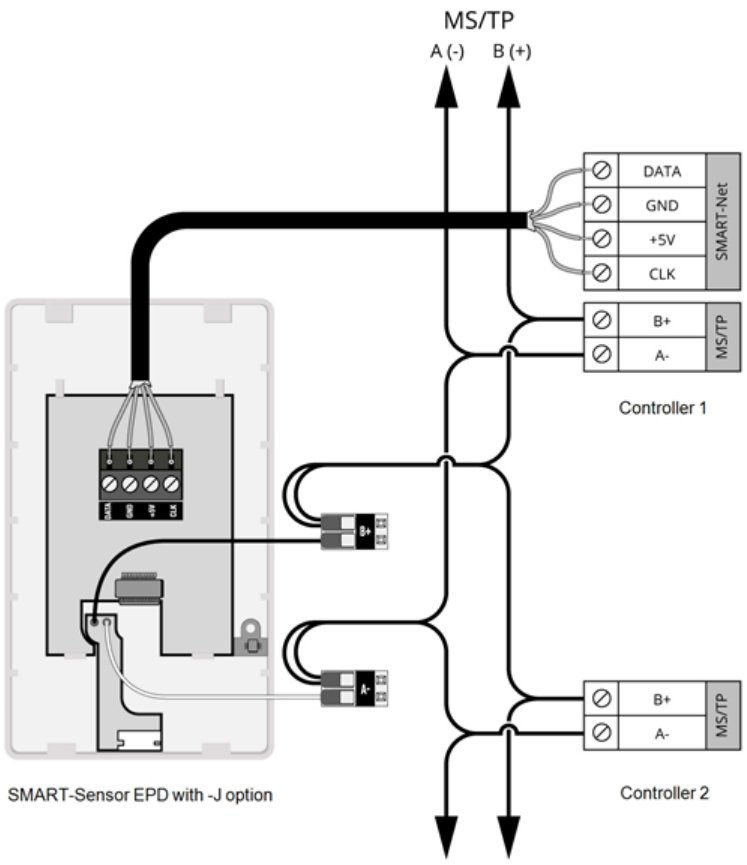

MS/TP connection for SMART-Sensor with micro-USB connector

Dealer Information:

© 2022 Reliable Controls® Corporation